SPIDER

Original texts from "cahier 3574 du CSTB

The technique

The spider plays the role of intermediary between the carrying structure and the fittings fixed onto the glass panel.
The fineness of its lines allows the construction to retain all its transparency.

3.1.4 Functional clearances

The anticipated functional clearances of the spiders as well as the point fittings have to allow the glass to move towards their fixing points without creating any stress in the plane of the glass or embedding moments under:

- the effects of the wind or snow loads (shortening of the distance between glass holes and deformation of the structure)
- the differential thermal dilatations between the structure and the glasses
- the differential displacements of the spiders

The fixing of the spiders on the façade

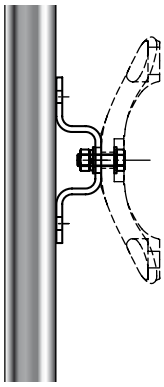

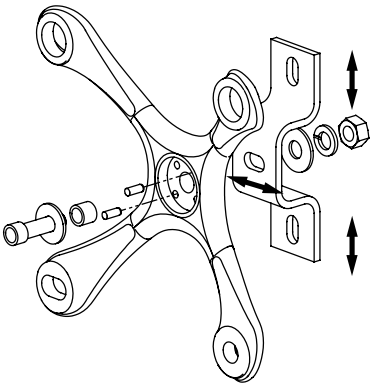

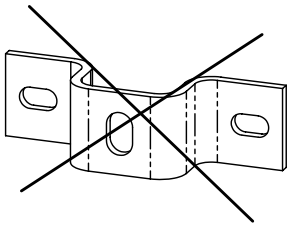

The central slotted hole has to be imperatively oriented horizontally, so that the supported weight does not cause the spider to slide down.

In order to obtain a correct adjustment of the spider, it is recommended to use an intermediary part, the “Omega”.
This part allows a bi-directional adjustment.

Dimensions

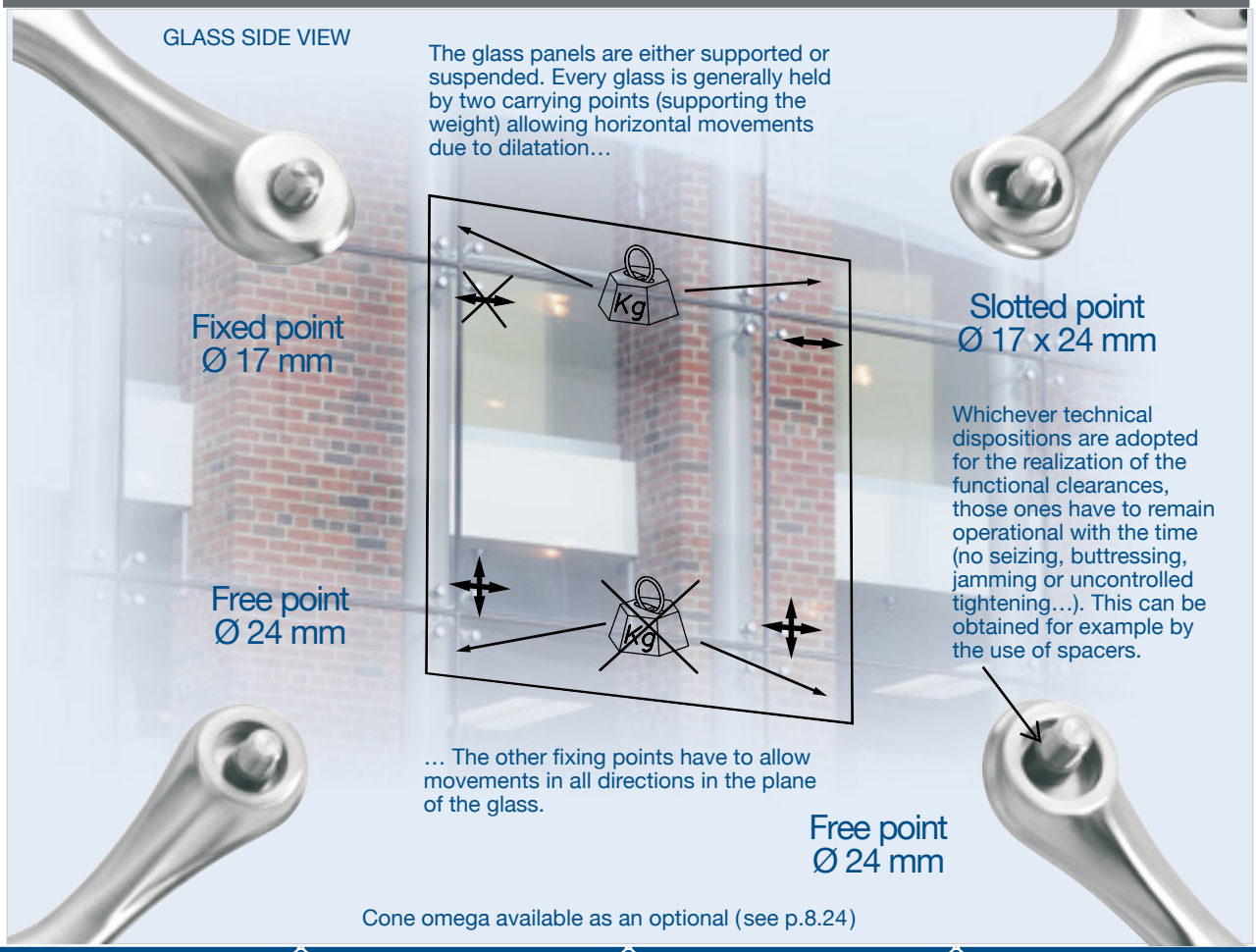

Cone omega available as an optional (see p.8.24)

Tel. : +33 (0)4 50 08 39 00 - Fax : +33 (0)4 50 08 39 49 - info@sadev.com
www.sadev.com

The anti-rotation of the spider

To avoid the risk of displacement of the spiders under the weight of the glasses during installation or in case of accidental glass breakage, the spiders have to be locked in rotation by any appropriate means (for example: use of high resistance bolts under controlled tightening, elastic and cotter pins etc.).

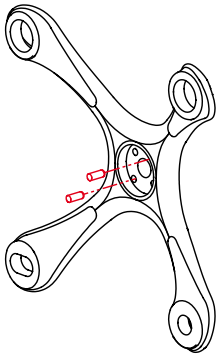

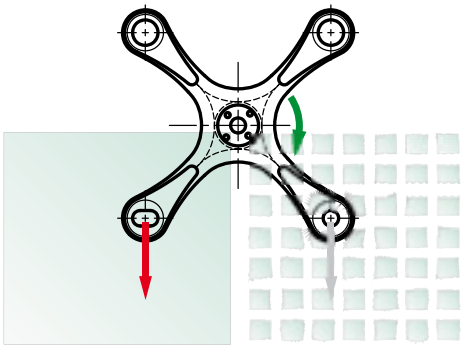

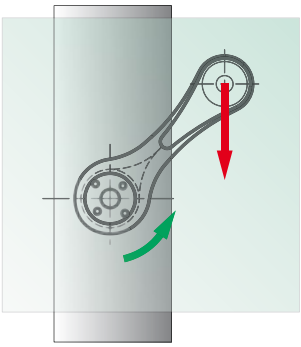

1 - In case of glass breakage, the spider is dragged in rotation by the remaining glass panel. It's from this point that the pins maintain the spider in position.

2 - All spiders positioned at the border of the façade are dragged in rotation by the glass panels. The pins maintain continuously the spiders in position.

The layout of the spiders on the façade

Each SADEV spider is delivered in accordance to its position on the façade.
In order to facilitate the orientation of the different positions, we've classified them in several mounting instructions that cover all scenarios. For all requests, it's sufficient for you to give us the inventory of your different positions. For example: 56 specimens of S3000 – 5.